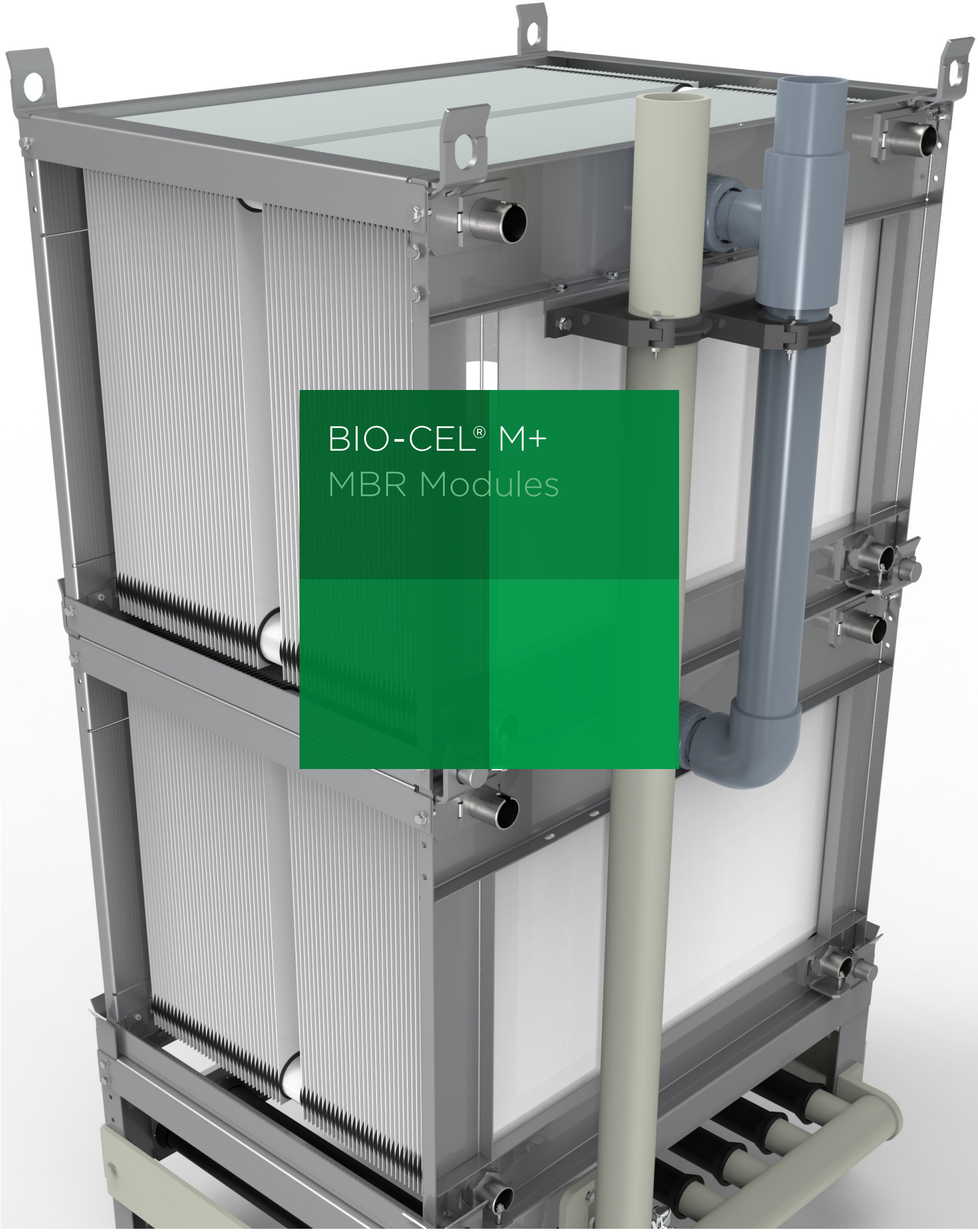

BIO-CEL® M+

MBR Modules

MANN+HUMMEL

The most versatile BIO-CEL® module ever.

BIO-CEL® M+ MBR MODULES & TANK

BIO-CEL® M+ is a membrane bioreactor module with a high performance ultrafiltration membrane specifically designed for use in high cube containers.

ROBUST

BIO-CEL® M+ has a robust laminate that prevents clogging in the membrane module. Its high performance ultrafiltration membrane makes the module efficient and durable.

The membrane laminate also has a self-healing mechanism. In case of damage to the membrane, the spacer material in between the BIO-CEL membrane laminate sheets allows for a sealing of the damage through use of the biomass in the system.

MODULAR

Specifically engineered to be fully modular and extendable to meet all customer needs.

FLEXIBLE

BIO-CEL® M+ offers an easy scale up applied in decentralized wastewater treatment systems with a capacity of up to 1000m³/d per container. It can be combined with activated carbon directly in the filtration tank to achieve highest permeate quality and generate safe water for reuse.

SMART

BIO-CEL® is immersed in the aerobic biology. The high performance ultrafiltration membrane filters bacteria and solids effectively. This function increases the cleaning efficiency of wastewater treatment plants and reduces the footprint by more than 60% compared to a conventional wastewater treatment plant and offers compact decentralized wastewater treatment.

BIO-CEL® M+ UV400T

BIO-CEL® UV400T used for BIO-CEL M+ is the first membrane from MANN+HUMMEL that has been specifically developed and optimized for the use in membrane bioreactors offering greater longevity, support and performance.

The BIO-CEL® UV400T is an ultrafiltration membrane with pores smaller than solids and bacteria. It is a safe technology to prevent antibiotic-resistant bacteria from entering the aquatic environment.

BIO-CEL® UV400T is the ideal solution for the filtration of sewage sludge and the separation of solids and bacteria in the membrane bioreactor.

'SWEET SPOT' FOR BIO-CEL® M+ MODULES

BIO-CEL M+ is optimized for use in mobile and medium-sized wastewater treatment plants (≤1000 m^3/d). It fits perfectly into a High Cube container (for decentralized & mobile wastewater treatment plants), which allows the construction of extremely compact wastewater treatment plants.

BIO-CEL® M+200 can produce an average of 75m^3 of filtrate per day and treat the wastewater of 480 PE (population equivalent). This corresponds to the wastewater of about 115 households. Likewise, its permeate quality enables reuse for irrigational purposes e.g. in agriculutral sector.

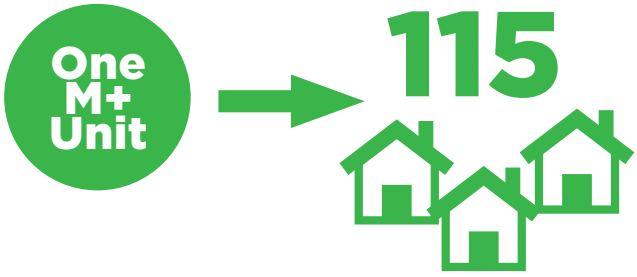

BENEFITS

- Its high clear water permeability of ≥1,200 lmh/bar leads to lower fouling tendencies and a significant decrease of cleaning cost.
- A superior chemical resistance of >1mio ppmh free chlorine increases the lifespan of the membrane.
- The polyester backing used for the BIO-CEL® UV400T provides a robust compound with a Polyvinylidene fluoride (PVDF) membrane.

MATERIALS

- BIO-CEL® UV400T is made of a highly durable PVDF on a non-woven polyester backing.
- Pore size: 0.06µm

BIO-CEL® M+ MBR

MEMBRANE MATERIAL

- **Polymer:** PVDF
- **Membrane Type:** UV400T
- **Support Layer:** Polyester
- **Drainage:** Polyester

MODULE

BIO-CEL® M+ MBR modules are designed for use in high cube containers. The module is expandable due to its advanced cassette system. Its high performance ultrafiltration membrane makes the modules more efficient and durable. The module can be combined with activated carbon for the elimination of trace substances.

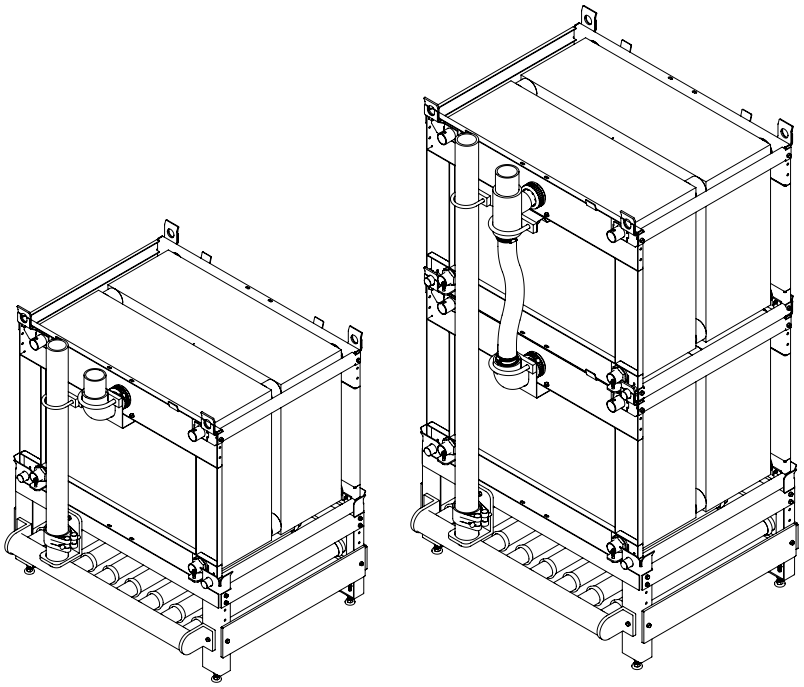

AVAILABLE MODULE TYPES

Module Type	Membrane Material	Membrane Area [m²]	Membrane Area [ft²]	No. of Cassettes	Dimensions [mm]	Dimensions [ft]	Pore Size
M+100	PVDF	100	1076	1	1213 x 1072 x 1345	3.98 x 3.5 x 4.5	0.06µm
M+200	PVDF	200	2152	2	1213 x 1072 x 2140	3.98 x 3.5 x 7	0.06µm

EUROPE
Germany: +49 611 962 6001
Italy: +39 0721 1796201
info.wfs@mann-hummel.com

AMERICAS
USA: +1 805 964 8003
sales.mnus@microdyn-nadir.com

ASIA
APAC: +65 6457 7533
China: +86 10 8413 9860
waterchina@mann-hummel.com

MANN+HUMMEL

water-fluid-filtration.mann-hummel.com
mann-hummel.com

0323 © MANN+HUMMEL GmbH